Proposal for a

Thesis in the Field of

Information Technology

Digital Media and Instructional Design

In Partial Fulfillment of the Requirements

For a Master of Liberal Arts Degree

Harvard University

Extension School

[Date]

Matthew Farineau

[address line 1]

[address line 2]

[phone]

[email]

Proposed Start Date: TBD

Anticipated Date of Graduation: TBD

Thesis Director: TBD

## 1 Tentative Thesis Title

Small-Scale Electric Brewing System

## 2 Abstract

The goal of this project is to create a small-scale electric home brewing system that allows a user to enter data via a responsive website running on a local server. The microcontroller will use data entered by the user to control parts of the brewing process via integration between software running on the microcontroller and a series of hardware components.

## 3 Thesis Project Description

When brewing beer, undesirable flavors and inconsistencies in batches are often the result of poor temperature control and/or inaccurate timing during the boil and ingredient additions. This project is an attempt to remove some level of human error from the equation by creating a small-scale, affordable, semi-autonomous brewing system. By allowing a user to pre-program temperatures and durations of time to hold the liquid at temperature, this system aims to accomplish the goal of making the final product more consistent and closer to goals set by a recipe.

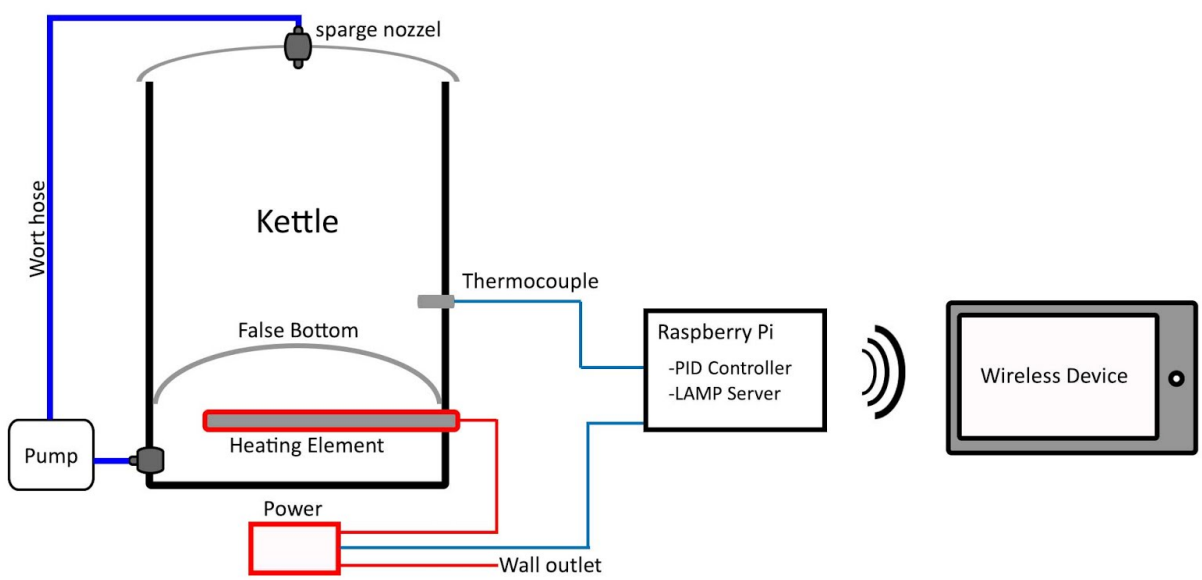


*Figure 1 - Diagram of proposed Small-Scale Electric Brewing System*

This project setup (*Figure 1*) is based on the "brew in a bag" system of all-grain brewing (*Figure 2*) as opposed to the more common three vessel system (*Figure 3*). In the "brew in a bag" system, the hot liquor tank, mash tun, and boil kettle all share the same vessel and grains are contained within a removable mesh bag. While this method is more space efficient and often more cost-effective for the home brewer, it is typically used for smaller volume batches and there is also some expected loss in sugar extraction efficiency from the grains, meaning initial grain volume and mash times must be

increased. The term "all-grain" means the user extracts sugar from whole grains by steeping them in heated water as opposed to the "extract" method of brewing wherein the user replaces whole grains with a pre-processed sugar extract. "All-grain" brewing adds time and complexity to the brewing process, but it also allows brewers to exert more control over the final product.

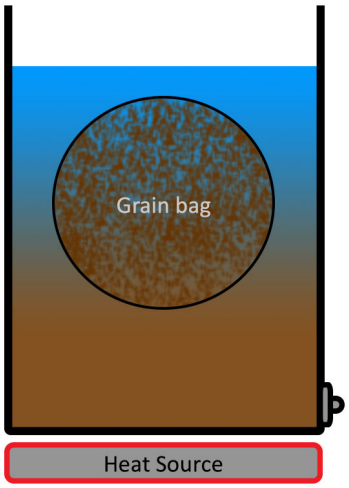


*Figure 2 - Diagram of single vessel (aka "Brew-in-a-bag") all-grain brewing system*

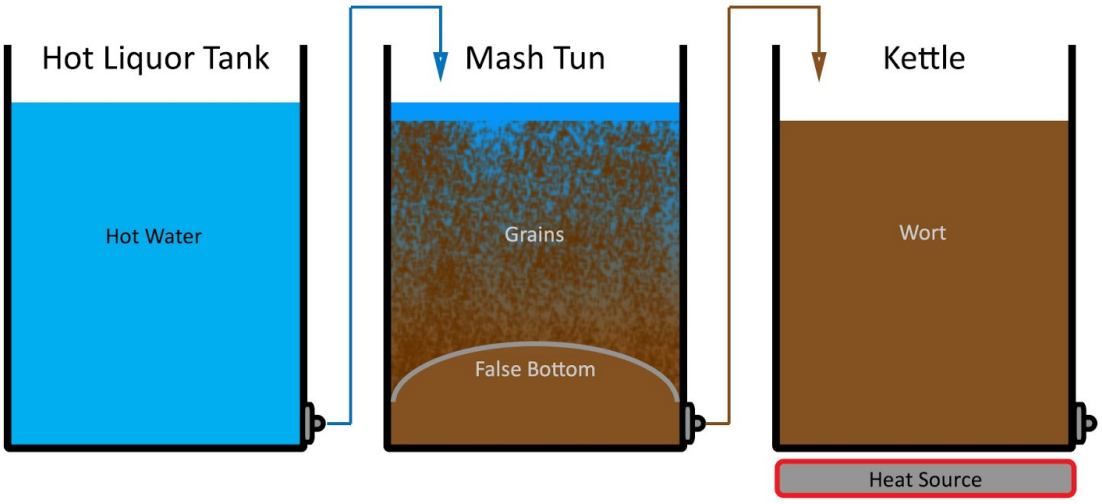


*Figure 3 - Diagram of three vessel all-grain brewing system*

### *3.2 Configuration*

The proposed brewing system will require the following data points to be accounted for:

- Input:
  - Temperature (input from thermocouple)
  - Goal temperature (set by user via website)
  - Time at goal temperature (set by user via website)
- Output:
  - Actual temperature (from thermocouple)
  - Actual time at goal temperature (calculation based on thermocouple and goal time)

This system will make use of, at a minimum, the following pieces of equipment:

- 15 Gallon Kettle
- False Bottom (prevents grain bag from contacting heating element)
- Submersible Heating Element
- Thermocouple (Thermometer)
- Raspberry Pi

### *3.3 Prior Work*

***3.3.1*** *The Electric Brewery* - theelectricbrewery.com
All electric do-it-yourself brewery. The Electric Brewery (*Figure 4*) costs around $4,500 and involves quite a lot more components than the proposed project aims to utilize. The Electric Brewery also does not allow control via wireless device and is based on the more common three vessel brewing setup (*Figure 5*).


*Figure 4 - Photo of The Electric Brewery (assembled)*
*Image from theelectricbrewery.com*

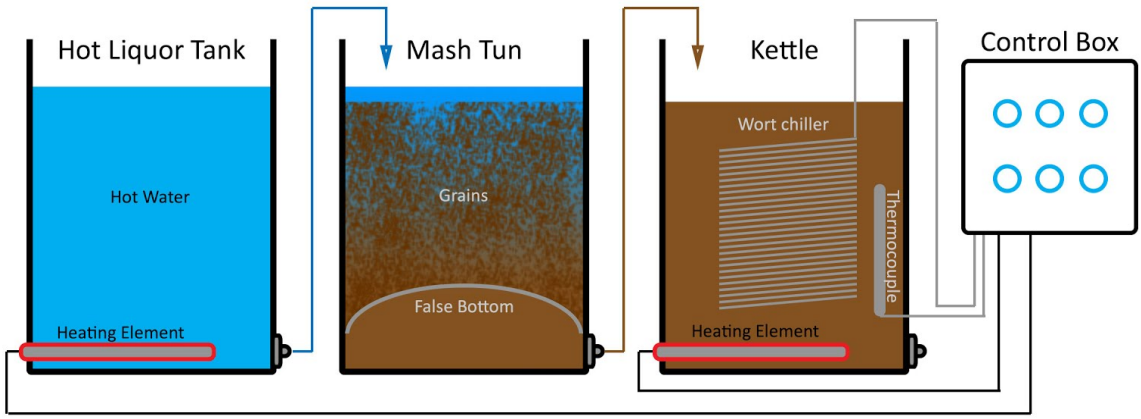


*Figure 5 - Simplified diagram of The Electric Brewery*

***3.3.2*** *Raspberry PI PID Fan Controller -*
http://simplyautomationized.blogspot.com/2013/09/raspberry-pi-pidpwm-12v-fan-controller.html
https://www.youtube.com/watch?v=gtdy4uctbvs
http://code.activestate.com/recipes/577231-discrete-pid-controller/
http://www.raspberrypi.org/forums/viewtopic.php?f=37&t=63714
A PID controller, or Proportional-Integral-Derivative controller, is a commonly used feedback loop integrated control system. The PID controller uses feedback from sensors to inform an error value set as the difference between a measured value and a desired value. The Raspberry PI PID Fan Controller project uses the raspberry pi board to control the speed of a fan by using temperature sensors.

## 4 Work Plan

*Phase 1* - Setup hardware and prep kettle.
*Phase 2* - Setup Raspberry Pi server and site.
*Phase 3* - Refine communication between server, Raspberry Pi and components.

### *4.1 Timeline*

***-TBD-***

### *4.2 Assumptions, Risks and Alternatives*

Risks to this project in *Phase 1* include difficulty in controlling voltage to the heating element with the Raspberry Pi. There is the potential to destroy the Raspberry Pi and also the risk of fire or electric shock to the user. All wires must be properly insulated and grounded and code must be written to set safe operating parameters for heating element.

In *Phases 2 and 3*, there is anticipated difficulty in establishing communication between the server and the Raspberry Pi.

## 5 Glossary

*All grain brewing* - A process of brewing utilizing whole, cracked grains as a sugar source.

*Beer Smith* - beersmith.com - Software for building beer recipes. The planned XML data import/export format will use the xml export from Beer Smith as a template.

*Boil kettle* - A tank where wort is boiled.

*Brew in a bag* - A brewing system wherein the hot liquor tank, mash tun, and boil kettle are the same vessel (see figure 2).

*Extract brewing* - A process of brewing utilizing pre-processed sugar extract as a sugar source.

*Hot liquor tank* - A tank used in all-grain brewing which contains heated water which becomes sparge water.

*LAMP* - Software stack for a web server which consists of Linux, Apache, MySQL, PHP.

*Mash* - Commonly used as both a noun and a verb; "mashing" is the process of steeping grains in hot water to extract sugars. "The mash" refers to the step in the brewing process where sugar is extracted from grains.

*Mash tun* - A tank used in all-grain brewing wherein cracked grains are mixed with hot water and allowed to sit for a pre-determined duration. This process extracts sugars from grains.

*Microcontroller* - A small computer containing a processor core, memory, and programmable input/output peripherals.

*Raspberry Pi* - http://www.raspberrypi.org/ - An open-source microcontroller.

*Sparge water* - Heated water which is added to grains in a mash tun.

*Wort* - The liquid which results from the brewing process (called wort until yeast is added).